SMA PACKAGE (-S)

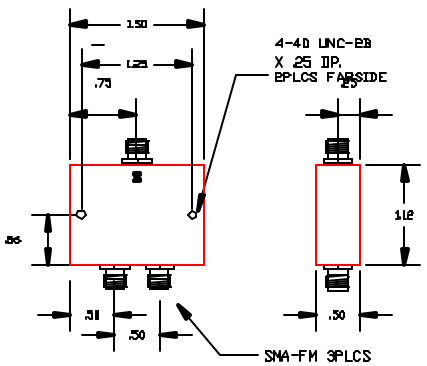

BNC PACKAGE (-B)

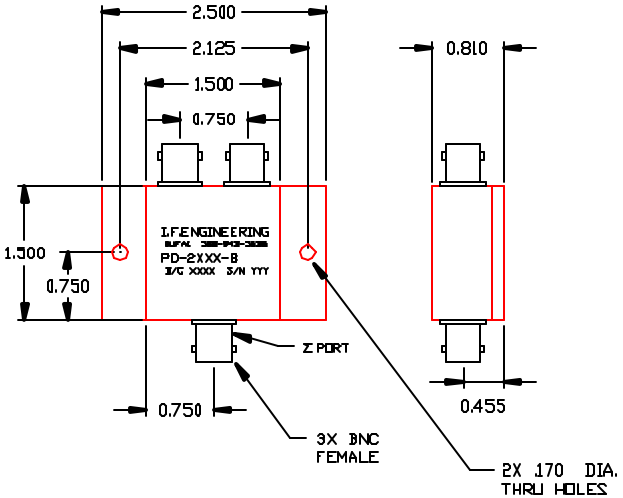

TYPE "N" PACKAGE (-N)

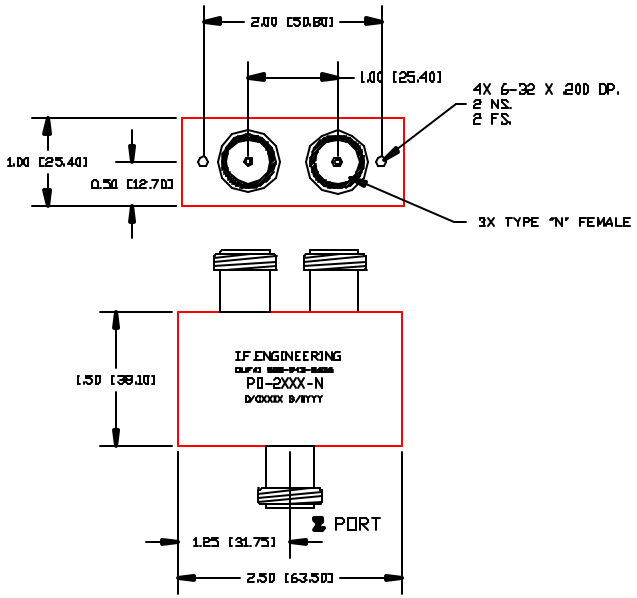

SMA2 PACKAGE (-S2)

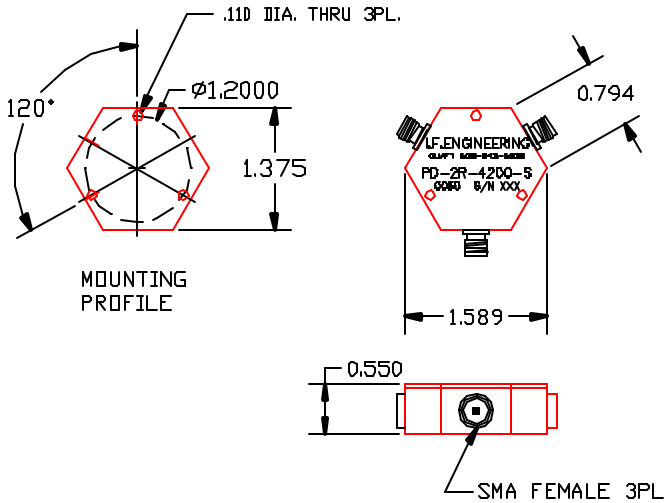

FP FLATPACK (-FP)

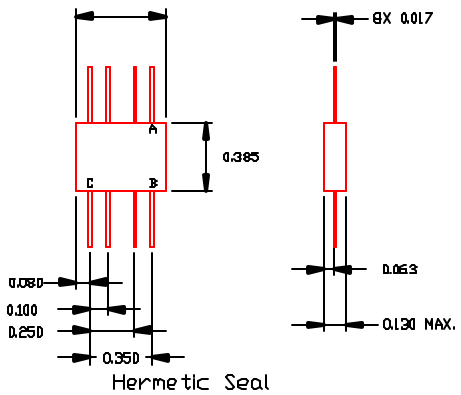

SM1 PACKAGE (-SM1)

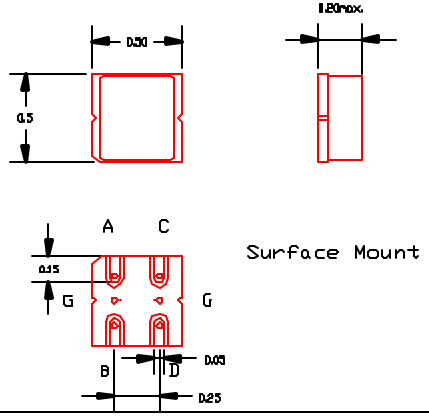

NOTES:

1. SPECIFICATIONS SUBJECT TO CHANGE WITHOUT NOTICE.
2. CONTACT FACTORY FOR OTHER OPTIONS

I. F. ENGINEERING
151 CENTER ROAD, DUDLEY MA 01571

Telephone 508-943-5636
Facsimile 508-943-4872
ifeng@ma.ultranet.com
www.ifengineering.com

CODE IDENT NO.
OUFA1